UNOFFICIAL DOCUMENT

PORTION OF: NE1/4, NE 1/4, SECTION 33, T. 33 N., R. 04 E., W.M.

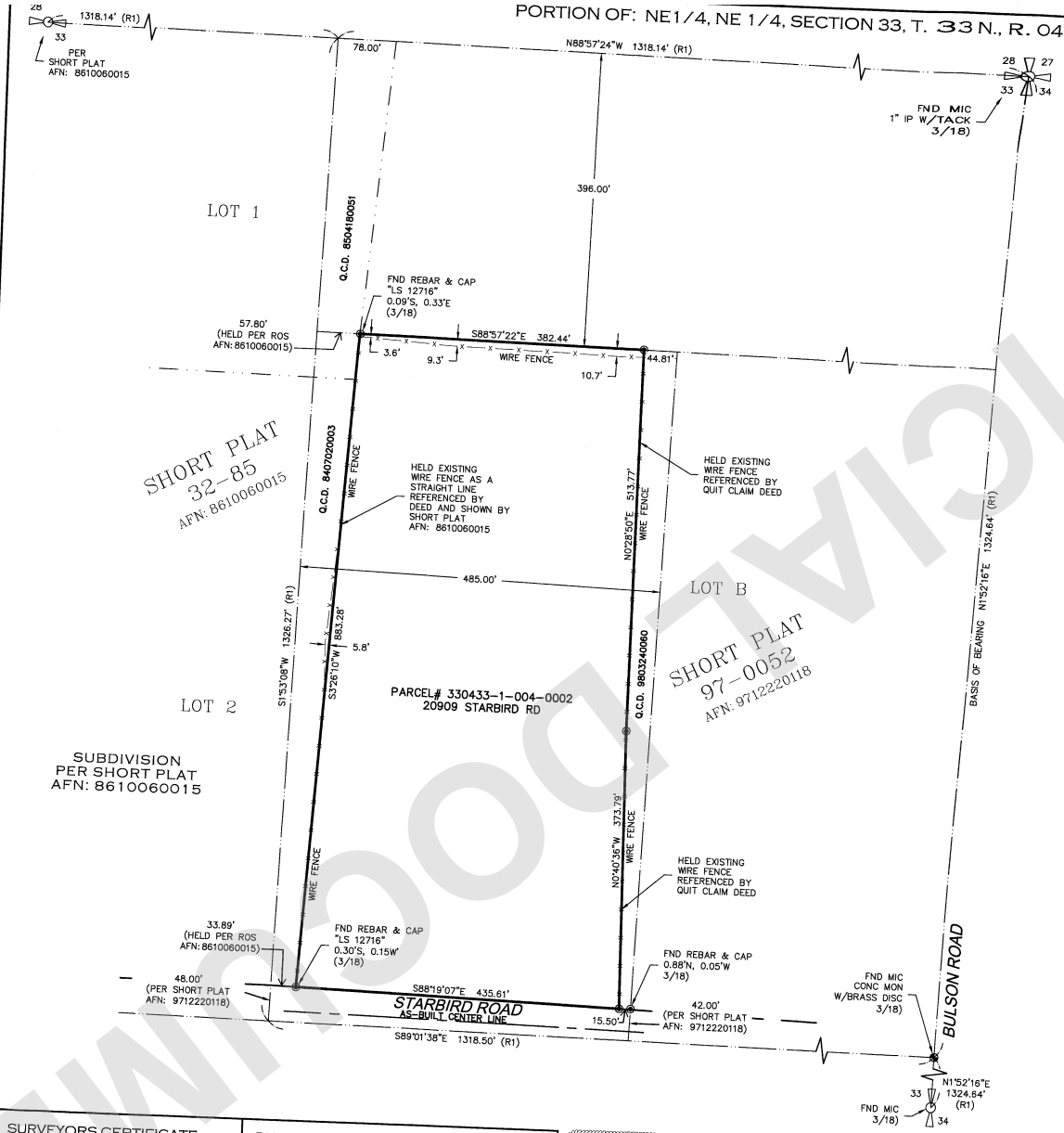

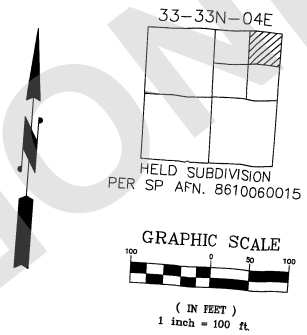

GRAPHIC SCALE

100 0 50 100

(IN FEET)
1 inch = 100 ft.

LEGEND

- SUBDIVISION LINES
- AS-BUILT ROAD CENTER LINE
- PROPERTY LINES
- RIGHT-OF-WAY LINES
- LOT LINES
- WIRE FENCE

◉ SET 5/8" IRON REBAR W/ BLUE PLASTIC CAP STAMPED "PLS 33127" UNLESS OTHERWISE STATED.

◐ MONUMENTS AS NOTED.

(R1) SHORT PLAT AFN: 8610060015 (HELD FOR SUBDIVISION)

NOTES:

BASIS OF BEARING: HELD A BEARING OF N01°52'16" ALONG THE THE EAST LINE OF SECTION 33, BETWEEN FOUND MONUMENTS

NO TITLE REPORT PROVIDED, EASEMENTS, IF ANY, ARE NOT SHOWN.

REFERENCE SURVEYS:
SHORT PLAT SP32-85: AFN. 8610060015
SHORT PLAT SP97-0052 AFN. 9712220118

THE LOCATION AND DESCRIPTION OF ALL SURVEY MARKERS SHOWN HEREON ARE BASED ON FIELD OBSERVATIONS TAKEN IN MARCH, 2016, UNLESS OTHERWISE INDICATED.

WORK PERFORMED IN CONJUNCTION WITH THIS SURVEY UTILIZED THE FOLLOWING EQUIPMENT AND PROCEDURES: (A) LEICA TS 16I ELECTRONIC TOTAL STATION, MAINTAINED TO THE MANUFACTURER'S SPECIFICATIONS PER W.A.C. 332-130-100. (B) FIELD TRAVERSE, EXCEEDING REQUIREMENTS SET FORTH IN W.A.C. 332-130-090.

LEGAL DESCRIPTION:

THE WEST 485 FEET OF THAT PORTION OF THE NORTHEAST QUARTER OF THE NORTHEAST QUARTER OF SECTION 33, TOWNSHIP 33 NORTH, RANGE 4 EAST OF THE WILLAMETTE MERIDIAN, LYING NORTHERLY OF THE COUNTY ROAD, RUNNING ALONG THE SOUTH LINE THEREOF;

EXCEPT THE NORTH 396 FEET THEREOF;

AND EXCEPT THAT PORTION OF SAID PREMISES LYING WEST OF AND EXISTING FENCELINE AS CONVEYED TO KENNETH WAYNE KITE AND FRANCES JUNE KITE, HUSBAND AND WIFE, ON JULY 2, 1984 UNDER AUDITOR'S FILE NO. 8407020003, RECORDS OF SKAGIT COUNTY, WASHINGTON;

AND ALSO EXCEPT THAT PORTION OF SAID PREMISES LYING EASTERLY OF THE CERTAIN FENCELINE DELINEATED ON SKAGIT COUNTY SHORT PLAT NO. 97-0052, APPROVED DECEMBER 19, 1997, AND RECORDED DECEMBER 22, 1997, IN VOLUME 13 OF SHORT PLATS, PAGES 73 AND 74, UNDER AUDITOR'S FILE NO. 9712220118, RECORDS OF SKAGIT COUNTY, WASHINGTON, AND CONVEYED TO RONALD K. DOWN ON MARCH 24, 1998, UNDER AUDITOR'S FILE NO. 9803240060, RECORDS OF SKAGIT COUNTY, WASHINGTON.

SITUATE IN SKAGIT COUNTY, STATE OF WASHINGTON

SURVEYORS CERTIFICATE

THIS MAP CORRECTLY REPRESENTS A SURVEY MADE BY ME OR UNDER MY DIRECTION IN CONFORMANCE WITH THE REQUIREMENTS OF THE SURVEY RECORDING ACT AT THE REQUEST OF RUDY SWIRTZ

JOSEPH R. DERSHAM CERTIFICATE NUMBER 33127

RECORDER'S-AUDITOR'S CERTIFICATE

NO. 201811130052
FILED FOR THIS 13 DAY OF NOV, 2018
AT 9:29 AM IN SURVEY VOL. ____ AT PAGE ____
AT THE REQUEST OF BENCHMARK SURVEYING LLC

SUPT. OF RECORDS-AUDITOR MGR. - DEPUTY AUDITOR

JOSEPH R. DERSHAM STATE OF WASHINGTON 33127 REGISTERED PROFESSIONAL LAND SURVEYOR
5/30/2018

BENCHMARK SURVEYING LLC
11915 44TH DRIVE SE
EVERETT, WA 98208
p. 206.396.6252

REVISIONS: REVISED 5/30/2018 JRD

RECORD OF SURVEY FOR RUDY SWIRTZ

DRAWN BY:	SCALE:	FIELD BOOK	FIELD CREW	DATE:	PROJECT NO.
BD	1"=20'	DIGITAL	DF	4/17/2018	18022

201811130052
11/13/2018 09:49 AM Pages: 1 of 1 Fees: $153.00
Skagit County Auditor